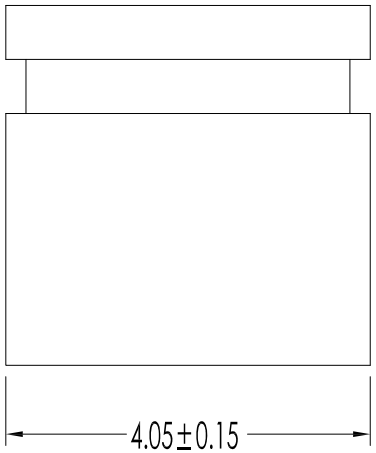

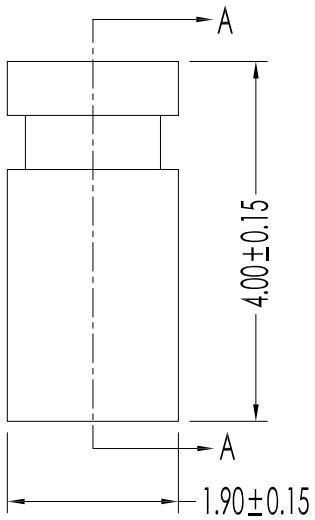

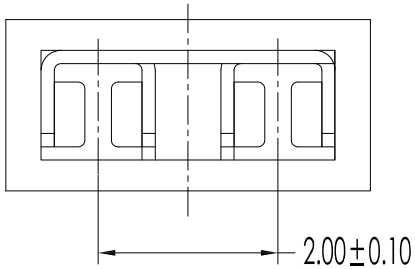

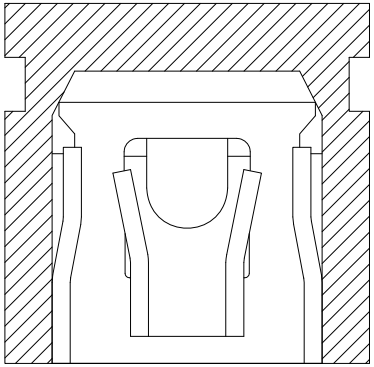

A - A

NOTES:

1. Current Rating: 1.0A AC,DC
2. Withstand Voltage: 100V AC/minute
3. Working Temperature: -40° C to 105° C
4. Insulation Resistance: 500MΩ Min.
5. Contact Resistance: 30mΩ Max.

P - 200 3 S 02 L 1 - PT B G - 0 201 B - 1

① ②③④⑤⑥⑦ ⑧⑨⑩ ⑪⑫⑬ ⑭

① P= PIN/Female Header series
② 2.00=Pitch 2.00mm
③ 1=Pin header/2=Female header/ 3=Mini Jumper/ 4=Machined Pin Header/ 5=Machined Female Header/M=M Type
④ S=Single Row/D= Double Row/T=Three Row/F=Four Row
⑤ XX= No.of Contacts
⑥ Insulator Height: A=1.0mm/B=1.35mm/C=1.5mm/D=1.70mm/E=1.95mm/ F=2.0mm/G=2.5mm/H=3.0mm/I=3.2mm/J=3.4mm/K=3.5mm/L=4.0mm/M=4.3mm/ N=4.6mm/O=5.0mm/P=5.7mm/Q=6.0mm/R=6.35mm/S=7.0mm/T=7.1mm/ U=7.2mm/V=8.1mm/W=8.5mm/X=8.9mm/Z=4.50mm/0=Indiscriminate/Y=2.54mm /1=7.40mm/2=3.10mm/4=4.50mm/5=2.10mm
⑦ Insulator Quantity: 1=1 Insulator/ 2=2 Insulator/ 3=3 Insulator
⑧ PBT/66= NyLon 66/46= NyLon 46/6T= NyLon 6T/9T= NyLon 9T/LP: LCP/PS= PPS
⑨ C=Copper Alloy/B=Brass/P=Phosphor Bronze/H=High conductivity copper/R=Red Copper
⑩ Plating:0=None/T=Tin Bright/N=Nickel Plating/G=Gold Flash Plating/1=Tin Matte/2=3u" Gold/3=5u" Gold/4=10u" Gold/5=15u" Gold/6=20u" Gold/7=15u" Gold/8=30u" Gold/S=Silver Plating/H=Half of Gold Tin
⑪ V= Vertical Dip Type/R= Right Angle Dip Type/L=Vertical SMT Type/ W=Right Angle SMT Type/S=Special P.C.B Modle/0=Without
⑫ 201=Product identification Code
⑬ Color: B=Black/W=White/ R=Red/U=Blue/G=Green/E=Gray
⑭ Packaging:1=PE bag/2=tube/3=Reel/4=Hot Tape Reel/5=Tape&Reel+CAP/ 6=Tape&Reel+PET/7=PVC Tray/8=Tube+CAP/9=Tube+PET

Item	Parts Material	Specification	Q'ty	Note	P/N
②	Contact	Brass/Plating: Au over Ni			P200T-050-10GF
①	Insulator	PBT+30%G.F ,UL 94V-0			P2004-450-6T01

Rev.	修正 Revisions	
A.01	新增规格	Tony 2013/07/15
B.01	变更料号	Tony 2020/12/09

-Tolerances-
Unless otherwise specified 公差

连接器公差	线材公差
X.X : ±0.35	0-200 : ±5
X.XX : ±0.30	200-800 : ±10
X.XXX: ±0.20	800-1490 : ±20
頁碼 Page: 1/1	L >1490 : ±30

SRCO® 东莞市盛瑞科技有限公司
Dongguan Shengrui Technology Co., Ltd.
TEL:86-769-82167146/87988175 MAIL:srco@gdsrco.com

THIS DRAWING CONTAINS INFORMATION THAT IS PROPRIETARY TO SHENGRUI INCORPORATED AND SHOULD NOT BE USED WITHOUT WRITTEN PERMISSION

機型 Model	-	核准 Approved	Tian 12/09/'20
客號 Customer P/N	-	審核 Checked	
盛瑞料號 Part No.	P-2003S02L1-PTBG-0201B-1	安規 Safety	
Environmental standard	RoHS	製圖 Drawn	郑岚 12/09/'20
單位 Unit:MM 比例 Scale:	Third angle projection	設計 Design	Tong 12/09/'20

圖名 Description:
2.00mm MINI Jumper H=4.00 mm Close Type Connector