CKTS	DIM A	DIM B
02	1.50	4.50
03	3.00	6.00
04	4.50	7.50
05	6.00	9.00
06	7.50	10.50
07	9.00	12.00
08	10.50	13.50
09	12.00	15.00
10	13.50	16.50
11	15.00	18.00
12	16.50	19.50
13	18.00	21.00
14	19.50	22.50
15	21.00	24.00
16	22.50	25.50

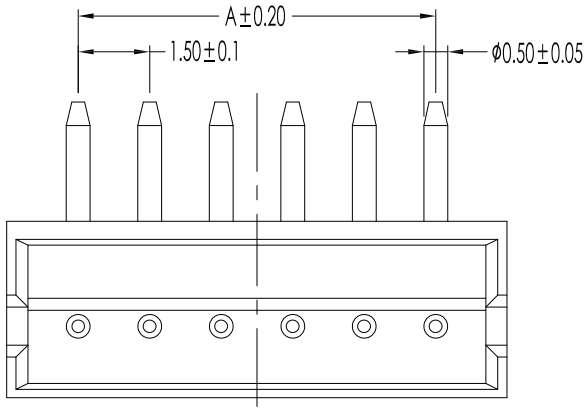

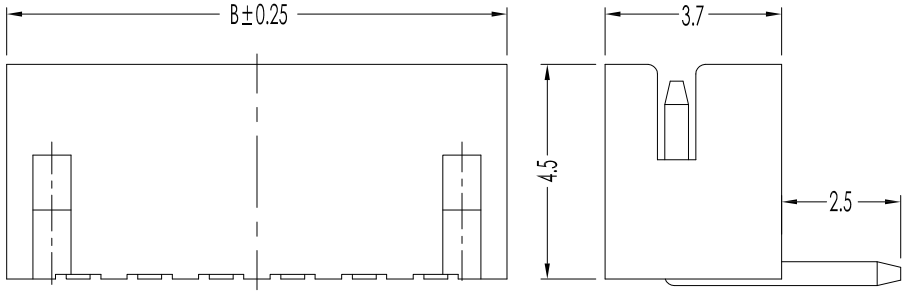

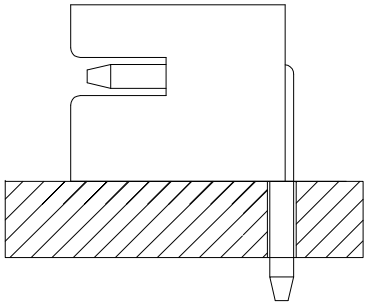

Assembly Layout

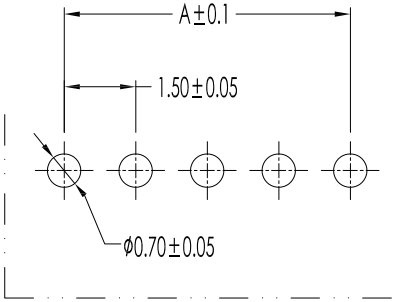

Recommended P.C.B Layout
(PCB Board Tolerance±0.05)

NOTES:
1. Current Rating: 1.0A AC/DC
2. Voltage Rating: 50V AC/DC
3. Temperature Range: -25° C to 85° C
4. Contact Resistance: 40mΩ max.
5. Insulation Resistance: 1000mΩ min.
6. Withstanding Voltage: 500V AC/minute.
7. Pin Retention Force: 10N Min.

A - 150 01 C xx S - xx B x - R J - x
① ②③④⑤⑥ ⑦⑧⑨ ⑩⑪ ⑫

① A=Board to Wire Connector
② 150=Pitch 1.50mm
③ 01=ZH 1.50mm Type Series
④ C=Connector/H=Housing/T=Terminal
⑤ XX= No.of Contacts
⑥ S=Single Row/D=Dual Row/A=Assembly
⑦ PT=PBT/66= NyLon 66/46= NyLon 46/ 6T= NyLon 6T/9T= NyLon 9T/LP=LCP/PS=PPS
⑧ C=Copper Alloy/B=Brass/P=Phosphor Bronze/H=High conductivity copper
⑨ Plating:0=None/T=Tin Bright/G=Gold Flash Plating/1=Tin Matte /2=3u" Gold/3=5u" Gold/4=10u" Gold/5=15u" Gold/6=20u" Gold/ 7=30u" Gold/8=Nickel Plating/S=Silver Plating/H=Half of Gold Tin
⑩ V=Vertical Dip Type/R=Right Angle Dip Type/L=Vertical SMT Type/W=Right Angle SMT Type/S=Special P.C.B Modle
⑪ J=Model J Type
⑫ Packaging: 1=PE bag/2=tube/3=Tape Reel/7=PVC Tray/ 8=Tube+CAP

Item	Parts Material	Specification	Q'ty	Note	P/N
②	PIN Material	Brass C2680/ Tin 100U" Min. over Ni 50U" Min.	×		A15001-TPIN-105
①	Insulator	NyLonLCP,UL94V-0 / Color: Natural	×		A15001-CHRS-105

Rev.	修正 Revisions

-Tolerances-
Unless otherwise specified 公差

连接器公差	线材公差
X.X : ±0.25	0-200 : ±5
X.XX : ±0.15	200-800 : ±10
X.XXX: ±0.05	800-1490 : ±20
X.° : ±2°	L >1490 : ±30

SRCO® 东莞市盛瑞科技有限公司
Dongguan Shengrui Technology Co., Ltd.
TEL:86-769-82167146/87988175 MAIL:srco@gdsrco.com

THIS DRAWING CONTAINS INFORMATION THAT IS PROPRIETARY TO SHENGRUI INCORPORATED AND SHOULD NOT BE USED WITHOUT WRITTEN PERMISSION

機型 Model	-	核准 Approved	Tina	05/15/'21	圖名 Description:
客號 Customer P/N	-	審核 Checked	郑岚	05/13/'20	Pitch 1.50mm ZH Crimp Style Right Angle DIP Connector
盛瑞料號 Part No.	A-15001CxxS-xxBx-RJ-x	安規 Safety			
Environmental standard	RoHS	製圖 Drawn	Tong	05/13/'20	
單位 Unit:MM 比例 Scale:	Third angle projection	頁碼 Page	1/1		